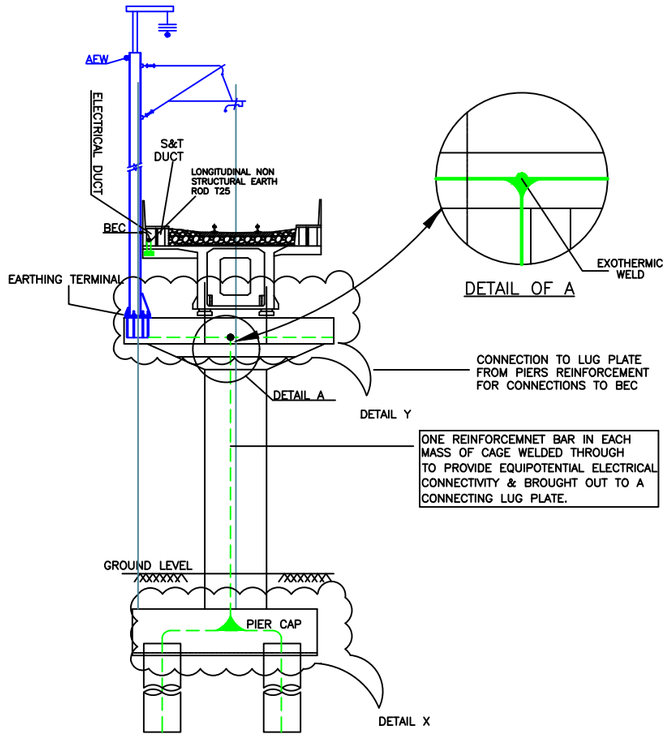

SECTION SHOWING LOCATIONS OF AEW,BEC AND THEIR INTER CONNECTIONS TO STEEL OHE MAST

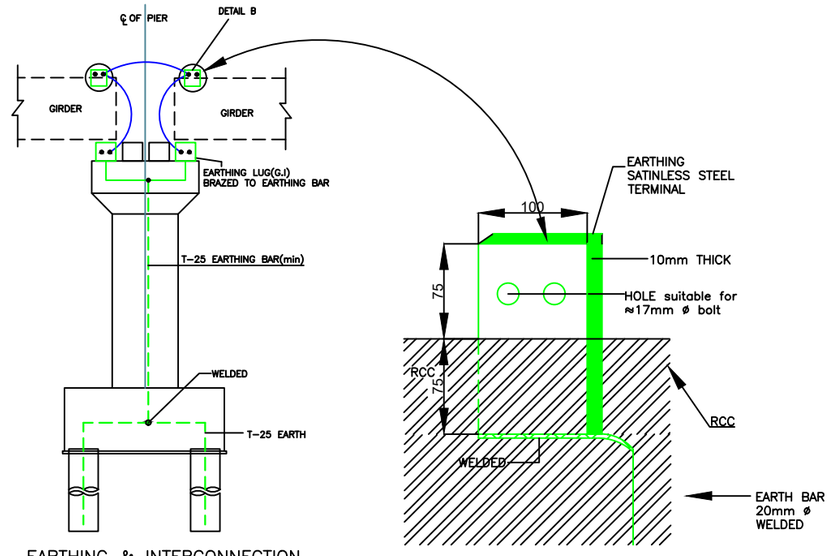

EARTHING & INTERCONNECTION OF EARTH TERMINALS OF RCC DECKS

TERMINAL PLATE DETAIL OF B

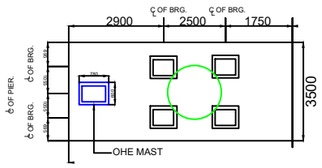

DETAIL OF Y
PLAN AT PIER CAP LEVEL WITH OHE MAST(TYPICAL)

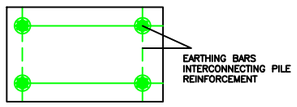

DETAIL OF X

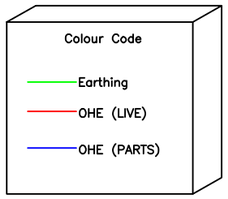

This is reproduced from DFCC Drawing No:EMP4/OHE/111

SCALE	REV.	DESCRIPTION	DRN.	CHD.	VER.	DATE
NTS			S.O	K.R	A.K.D	07.04.16
DRG NO.						
GC/DFCC/OHE/E&B/GIRDERS/TYP/603						

OWNER: DEDICATED FREIGHT CORRIDOR CORPORATION OF INDIA LTD.

GENERAL CONSULTANT: AECOM Asia Co. Ltd.
9TH FLOOR, INFINITY TOWER C DLF CYBER CITY
DLF PHASE II GURGAON 122002, INDIA
T: +91 124 2816000 F: +91 124 2816008

TITLE: **(INDICATIVE)**
EARTHING & BONDING OF OHE STRUCTURE ALONG THE BRIDGE GIRDERS(RCC) & PIERS

PROJECT: CONSTRUCTION OF EASTERN DEDICATED FREIGHT CORRIDOR SECTION BETWEEN KHURJA TO PILKHANI STATION