OCC ARRANGEMENT
KHURJA - PILKHANI-SAHNEWAL SECTION

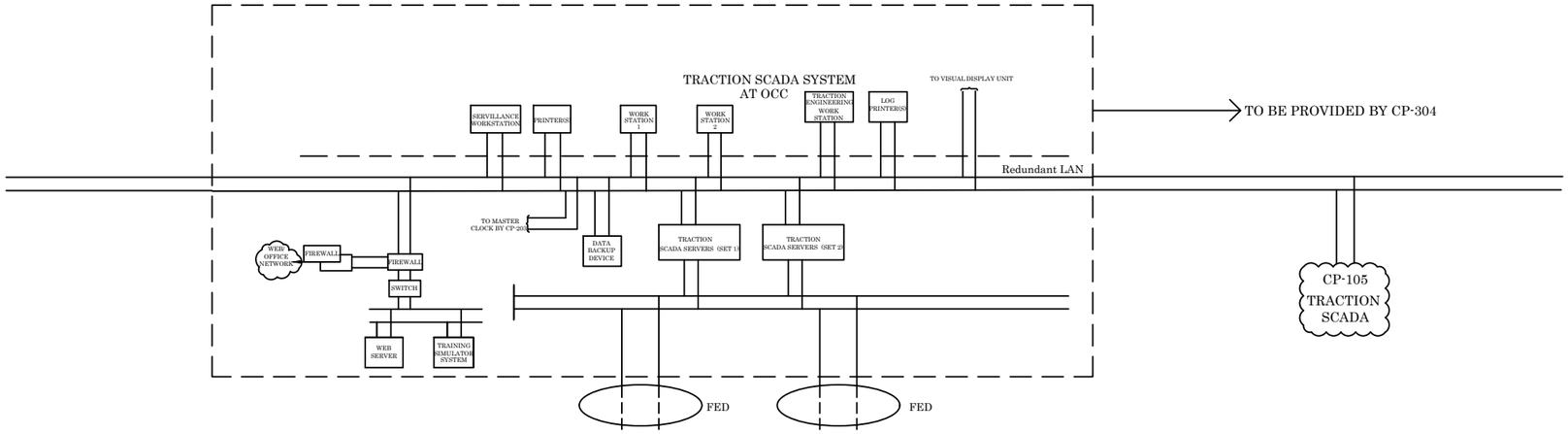

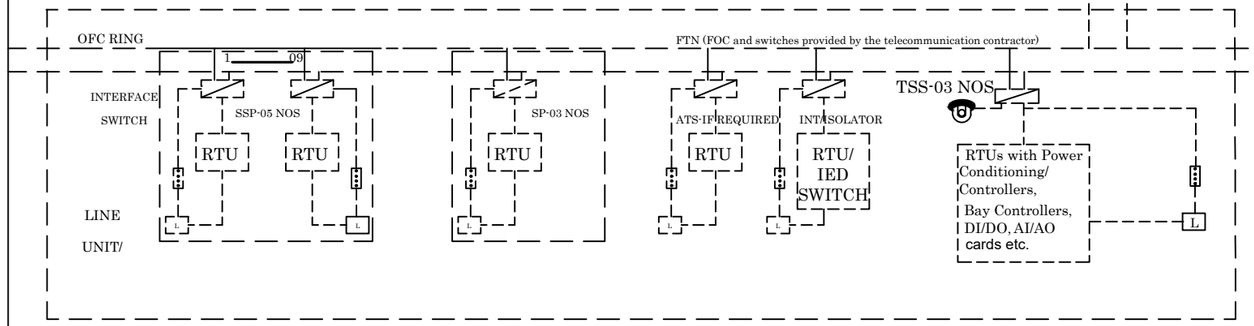

Field Equipment to be Provided by CP-304

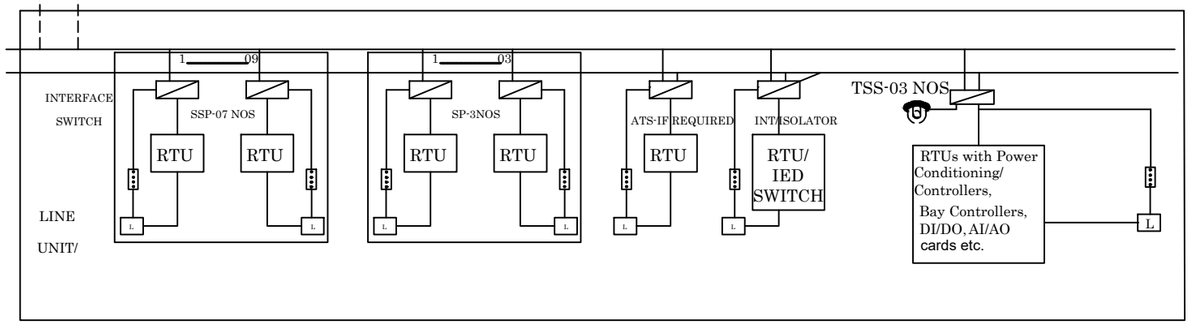

Field Equipment to be Provided by CP-305

LEGENDS

Communication Line Interface required for connecting SCADA Equipment with OFC ring/Switch

L - FAULT FACTOR

MODEM

NOTES:-

1.The drawing is indicative and shall be read in conjunction with the employer's requirement including Volume 2:PS for Electric Traction and associated works .

SCALE	REV.	DISCRIPTION	DRN.	CHD.	VER.	DATE
NTS			S.O	K.R	A.K.D	21-09-2017
DRG NO.						
GC/DFCC/TR/SCADA/305(a)	00					

OWNER

डेडीकेटेड फ्रेट कोरीडोर

DEDICATED FREIGHT CORRIDOR CORPORATION OF INDIA LTD.

GENERAL CONSULTANT

AECOM

AECOM Asia Co. Ltd.
9TH FLOOR, INFINITY TOWER C DLF CYBER CITY
DLF PHASE II GURGAON 122002, INDIA
T: +91 124 2816000 F: +91 124 2816008

TITLE

(INDICATIVE)
GENERAL ARRANGEMENT
BLOCK DIAGRAM FOR TRACTION
SCADA CONTROL

PROJECT

CONSTRUCTION OF EASTERN DEDICATED FREIGHT CORRIDOR SECTION BETWEEN KHURJA TO PILKHANI