SCHEMATIC DIAGRAM OF 2X27 KV SECTIONING POST (SP)

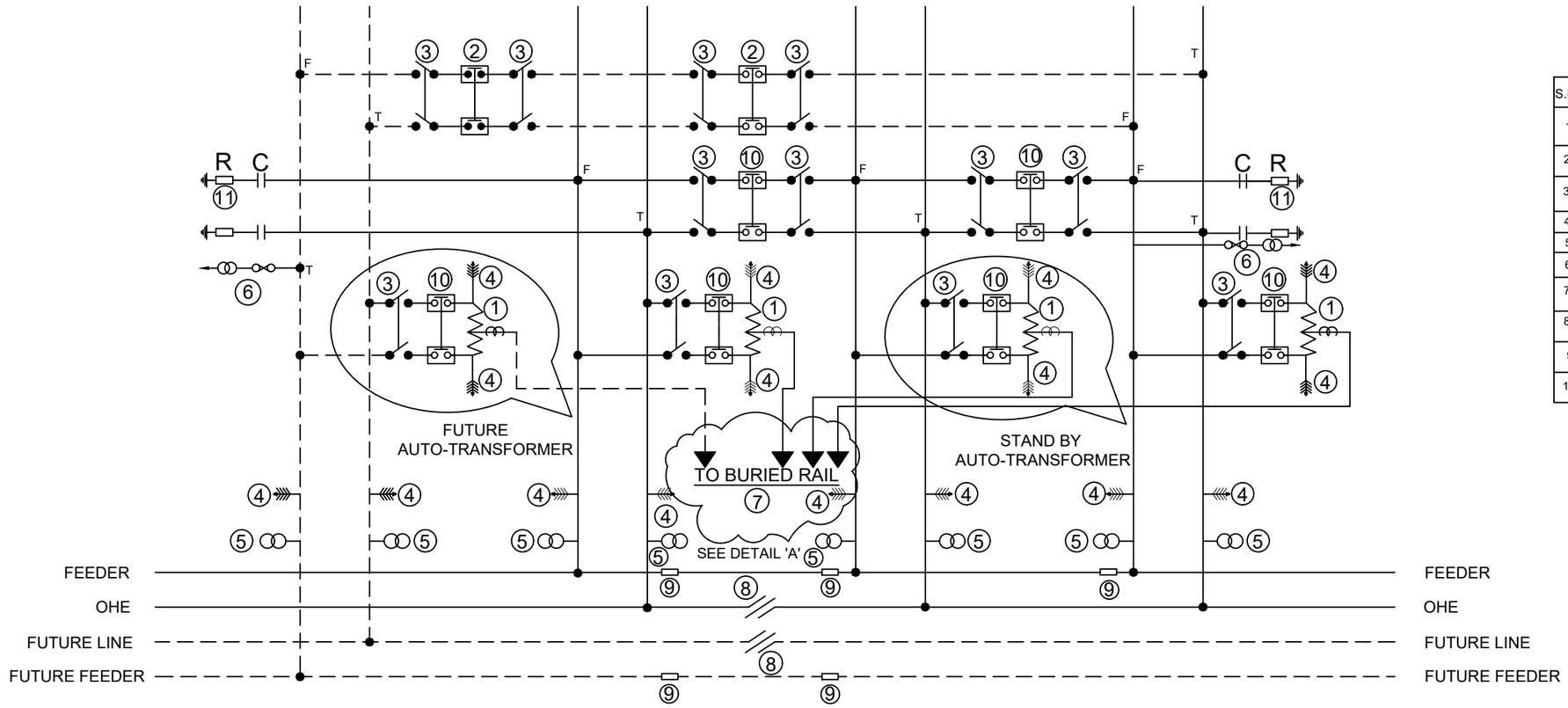

LEGENDS

S.NO	SYMBOL	DESCRIPTION
1.		AUTO TRANSFORMER WITH BUSHING CT
2.		2 X 25 kV DOUBLE POLE INTERRUPTER
3.		2 X 25 kV DOUBLE POLE ISOLATOR
4.		LIGHTNING ARRESTOR
5.		25/110V POTENTIAL TRANSFORMER
6.		AUXILIARY TRANSFORMER 10 kVA, 25kV/240V WITH DROP OUT FUSE
7.		BURIED RAIL
8.		PTFE NEUTRAL SECTION
9.		CUT-IN INSULATOR
10.		2 X 25 kV DOUBLE POLE CIRCUIT BREAKER ALONG WITH PROTECTION CT & PT AS REQUIRED.

NOTES:-

1. The drawing is indicative and shall be read in conjunction with the specifications & relevant standards if any.
2. The busbar inside the SP shall be rigid type.
3. All ratings/dimensions are indicative.The contractor shall provide the design as approved by the Engineer.
4. The equipment and other structure shown by dotted line is indicated only for space requirement of future extension during doubling the section.

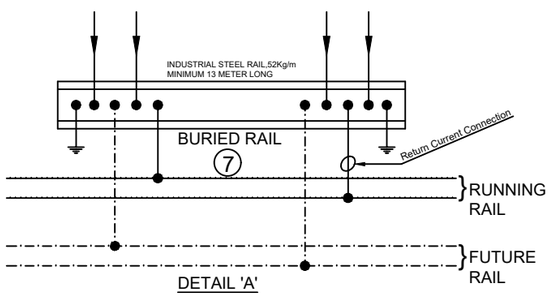

DEDICATED FREIGHT CORRIDOR CORPORATION OF INDIA LTD.

GENERAL CONSULTANT

AECOM Asia Co. Ltd.
9TH FLOOR, INFINITY TOWER C DLF CYBER CITY
DLF PHASE II GURGAON 122002, INDIA

EASTERN CORRIDOR

PROJECT: KHURJA TO PILKHANI

STRUCTURE: CONTRACT PACKAGE - 305

TITLE: (INDICATIVE) SCHEMATIC DIAGRAM OF 2X27 KV SECTIONING POST (SP)

SCALE	DATE	DRAWN BY	CHECKED BY	APPROVED BY	DRG. NO.	REV.
NTS	15.05.2017	S.O	K.R	A.D	GC/DFCC/PS/SP/SCH/TYP/201	00