SCHEMATIC DIAGRAM OF 132/55 kV TRACTION SUBSTATION

(WITH ONE TRANSFORMER SCOTT CONNECTED AND EARMARKED SPACE FOR FUTURE EXTENSION)

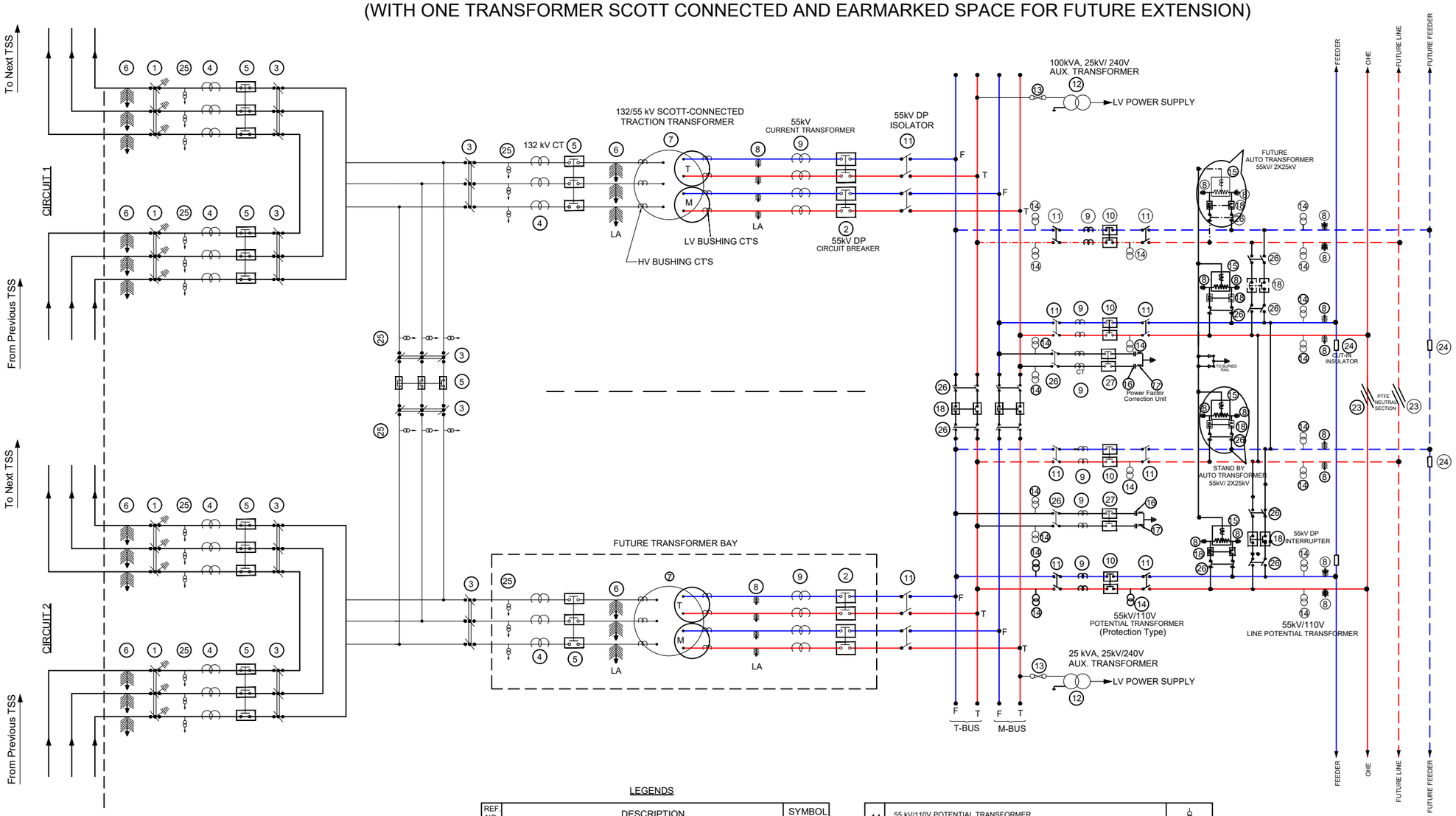

LEGENDS

REF. NO.	DESCRIPTION	SYMBOL
1	132 kV TRIPLE POLE ISOLATOR WITH EARTH BLADE	
2	55 kV DOUBLE POLE CIRCUIT BREAKER(Transformer Bay)	
3	132 kV TRIPLE POLE ISOLATOR	
4	132 kV CURRENT TRANSFORMER	
5	132 kV, TRIPLE POLE CIRCUIT BREAKER	
6	LIGHTNING ARRESTER	
7	132/55kV, 60/84/100 MVA SCOTT-CONNECTED TRACTION TRANSFORMER WITH BUSHING CTs.	
8	LIGHTNING ARRESTER	
9	55 kV, CURRENT TRANSFORMER	
10	55 kV DOUBLE POLE CIRCUIT BREAKER	
11	54 kV DOUBLE POLE ISOLATOR	
12	AUXILIARY TRANSFORMER	
13	DROP OUT FUSE SWITCH	
14	55 kV/110V POTENTIAL TRANSFORMER	
15	AUTO TRANSFORMER (55kV / 2 X 25 kV)	
16	55 kV Power Factor Correction Unit-I	
17	55 kV Power Factor Correction Unit-II	
18	55 kV DOUBLE POLE INTERRUPTER (VACUUM / SF6)	
23	PTFE NEUTRAL SECTION	
24	CUT-IN INSULATOR	
25	POTENTIAL TRANSFORMER	
26	55 kV DOUBLE POLE ISOLATOR(Line Feeder)	
27	55 kV DOUBLE POLE CIRCUIT BREAKER(for capacitor bank)	

NOTES:-

1. The drawing is indicative and shall be read in conjunction with the specifications & relevant standards if any.
2. All ratings/dimensions are indicative.The contractor shall provide the design as approved by the Engineer.
3. The equipment and other structure shown by dotted line is indicated only for space requirement of future extension during doubling the section.
4. Standby Auto Transformer should have facility of connection on either side of neutral section.

DEDICATED FREIGHT CORRIDOR CORPORATION OF INDIA LTD.

GENERAL CONSULTANT

AECOM

AECOM Asia Co. Ltd.
9TH FLOOR, INFINITY TOWER C DLF CYBER CITY
DLF PHASE II GURGAON 113202, INDIA

EASTERN CORRIDOR

PROJECT: KHURJA TO PILKHANI

STRUCTURE: CONTRACT PACKAGE - 305

TITLE: (INDICATIVE)
SCHEMATIC DIAGRAM OF 132/55 KV TRACTION SUB-STATION
(WITH ONE TRANSFORMER SCOTT CONNECTED AND EARMARKED SPACE FOR FUTURE EXTENSION)

SCALE	DATE	DRAWN BY	CHECKED BY	APPROVED BY	DRG. NO.	REV.
NTS	12-05-2017	S.O	K.R	A.K.D.	GC/DFCC/PS/TSS/SCH/TYP/101-3(a)	00